Remeha P 320

Fuel oil/gas boilers

English
06/04/06

Technical instructions

63184

UK 300008452-001-C

remeha

Contents

Introduction 3

Description 4

1 Technical characteristics 5
2 Main dimensions 6

Installing the boiler 7

1 Boiler location 7
2 Ventilation 8

Mounting 8

Hydraulic connections 9

1 Important recommendations on connecting the heating circuit to the boiler and the drinking water system 9
2 Important recommendations for connecting the boiler to the heating circuit 10
3 Filling the system 11
4 Sludge removal 11

Chimney connection 12

1 Flue size 12
2 Chimney connection 12

Fuel-oil or gas connections 13

Electrical connections 13

Maintenance 14

1 Sweeping 14
2 Cleaning the casing material 15
3 Precautions required in the case of long boiler stops (one or more years) 15
4 Precautions required if the heating is stopped when there is a risk of freezing 15

Burner maintenance 16

System maintenance 16

1 Water level 16
2 Draining 16

Identification plate 16

Spare parts - P 320 17

Directive 97/23/EC

Gas and oil boilers with a maximum operating temperature of 110°C and hot water tanks with a maximum operating pressure of 10 bar pertain to article 3.3 of the directive, and therefore, cannot be CE-marked to certify compliance with the directive 97/23 EC.

The boilers and hot water tanks are designed and manufactured in accordance with the sound engineering practice, as requested in article 3.3 of the directive 97/23/EC; it is certified by compliance with the directives 90/396/EC, 92/42/EC, 73/23 EC and 89/336/EC.

Warning

The boiler shall be assembled and installed by a qualified professional only.

For a proper operating of the boiler, follow carefully the instructions.

Symbols used

	Caution danger	Risk of injury and damage to equipment. Attention must be paid to the warnings on safety of persons and equipment
	Specific information	Information must be kept in mind to maintain comfort
	Reference	Refer to another manual or other pages in this instruction manual

Description

The boilers of the P 320 range are pressurised hot water boilers designed for connecting to a flue pipe which require a separate automatic fuel-oil or gas burner.

The useful power of P 320 boilers is between 70 and 330 kW.

Models available

Boiler with control panel, which may be fitted with an optional Rematic 2945 C3K control unit for heating only or heating and domestic hot water production.

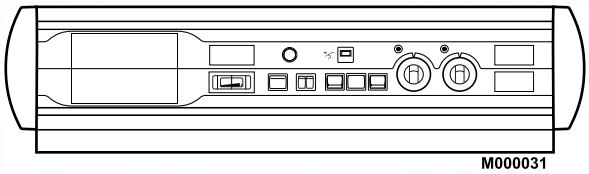

spares & parts online IBASIS.CO.UK

1 Technical characteristics

Maximum operating pressure : 6 bar

Boiler thermostat setting : 30 to 90°C

Safety thermostat setting : 110 °C

Boiler			P 320-4	P 320-5	P 320-6	P 320-7	P 320-8	P 320-9
Useful output		kW	70-105	105-140	140-180	180-230	230-280	280-330
Power input		kW	79.5-119.3	119.3-159.1	159.1-204.5	204.5-261.4	261.4-318.2	318.2-375.0
Number of sections			4	5	6	7	8	9
Water capacity		l	96	116	136	156	176	196
Water resistance	Δ T = 15K (1)	mbar	6.2	10.9	20.4	30	44.5	63.8
Pressure in the furnace for nozzle pressure = 0		mbar	+0.3	+0.6	+1.1	+1.6	+2.2	+2.5
Smoke temperature (1) (3)		°C	< 210	< 210	< 210	< 210	< 210	< 210
Mass flue gas flow rate (1)	Fuel oil	Kg/h	178	238	306	391	475	560
	Gas	Kg/h	187	250	321	410	499	588
Combustion chamber	Recorded diameter	mm	377	377	377	377	377	377
	Depth	mm	621	781	941	1101	1261	1369
	Volume	m^3	0.096	0.122	0.148	0.174	0.200	0.226
Maintenance consumption	by 50°C	%	0.17	0.14	0.13	0.11	0.10	0.09
Shipping weight		kg	610	739	845	980	1101	1228

(1) Nominal operation (top boiler power)

(2) CO_2 = 13.1 to 13% with fuel oil and 9.5% with natural gas.

(3) Boiler temperature : 80 °C, Ambient temperature : 20 °C

1 mbar = 10mmWC = 10 daPa

In order for the boiler to operate correctly, it is imperative to respect the draught at the nozzle: 0 at the nozzle.

2 Main dimensions

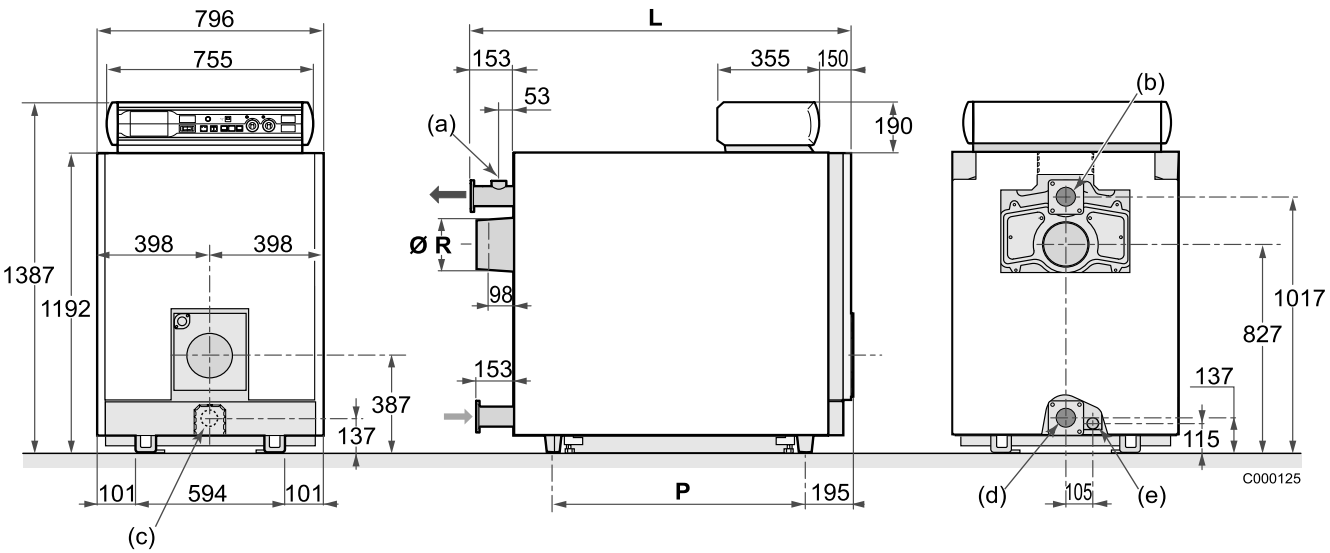

(a) Rp 1 1/2 socket for the safety control unit

(b) 2 1/2 heating outlet (flange + counter flange)

(c) Sludge removal hole Ø Rp 2 1/2

(d) 2 1/2 heating return (flange + counter flange)

(e) Rp 1 1/2 draining outlet (supplied with plug)

	P 320-4	P 320-5	P 320-6	P 320-7	P 320-8	P 320-9
L (mm)	991	1151	1311	1471	1631	1791
P (mm)	490	650	810	970	1130	1290
R (mm)	180	180	180	200	200	200

1 Boiler location

The P320 boiler does not require a special base for its assembly. Their closed furnace system means that the floor need not have refractory properties. All you have to ensure is that the floor can support the weight of the boiler when it is fitted for operation. If the boiler location is not determined precisely, leave enough space around the boiler to facilitate monitoring and maintenance operations.

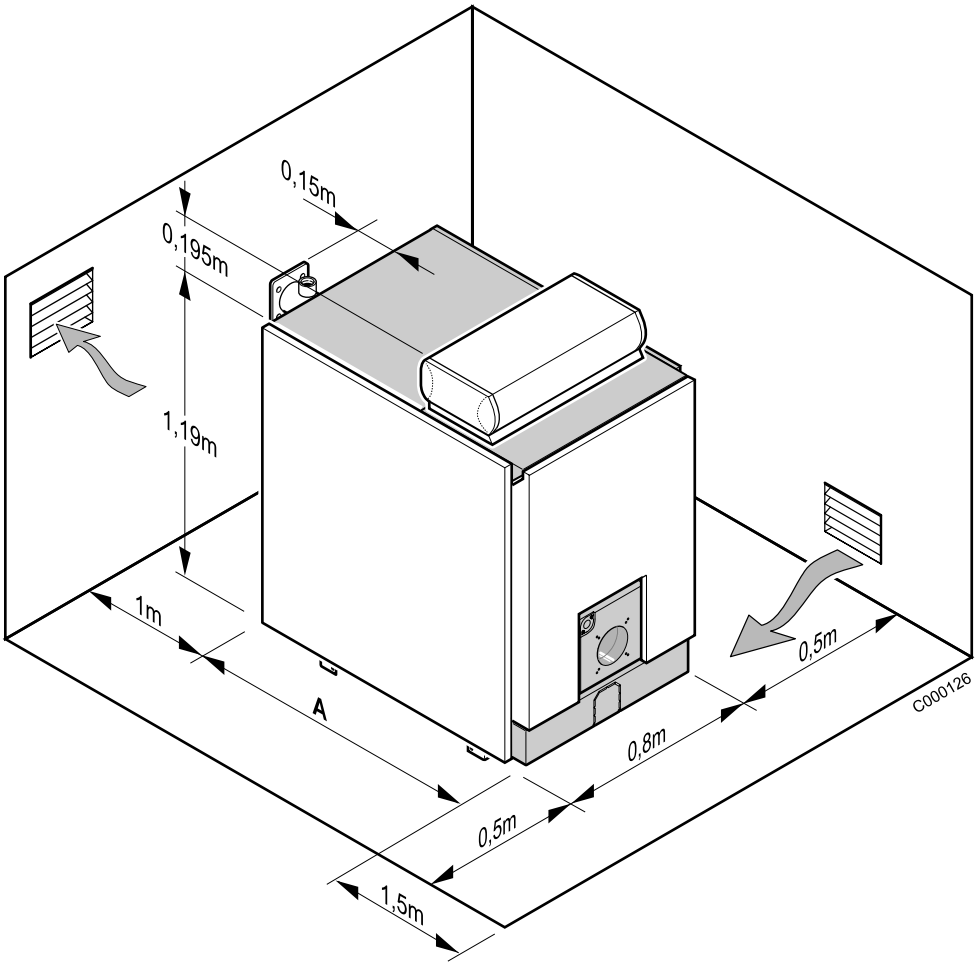

Boiler	P 320-4	P 320-5	P 320-6	P 320-7	P 320-8	P 320-9
A	840	1000	1160	1320	1480	1640

Pay attention to the overall volume of the burner when the door is open. To install several boilers in cascade, these dimensions should be adapted accordingly.

2 Ventilation

The location of air inlets in relation to the high ventilation openings shall ensure that the air is renewed in the entire volume of the boiler room.

It is in any case imperative to conform to the local regulations in force.

Warning:

In order to avoid damage to the boilers, it is necessary to prevent the contamination of combustion air by chlorine and/or fluoride compounds, which are particularly corrosive.

These compounds are present, for example, in aerosol sprays, paints, solvents, cleaning products, washing products, detergents, glues, snow clearing salts, etc.

Therefore:

- Do not suck in air evacuated from premises using such products: hairdressing salons, dry cleaners, industrial premises (solvents), premises containing refrigeration systems (risk of refrigerant leakage), etc.
- Do not stock such products close to the boilers.

If the boiler and/or peripheral equipment are corroded by such chloride or fluoride compounds, the contractual guarantee cannot be applied.

Mounting

For mounting instructions, see installation instructions.

1 Important recommendations on connecting the heating circuit to the boiler and the drinking water system

Installation must be carried out in accordance with the prevailing regulations, the codes of practice and the recommendations in these instructions.

The expansion tank must be connected directly to the boiler without valves or stop valves.

Likewise, the safety valve must be connected directly to the boiler without valves or stop valves.

Example of an installation:

The example of an installation shown below does not cover every possible configuration. Its sole aim is to draw your attention to the basic rules to be respected. Comply at all times with the codes of practice and the prevailing national or local regulations.

P 320 boiler with domestic hot water production using an independent tank

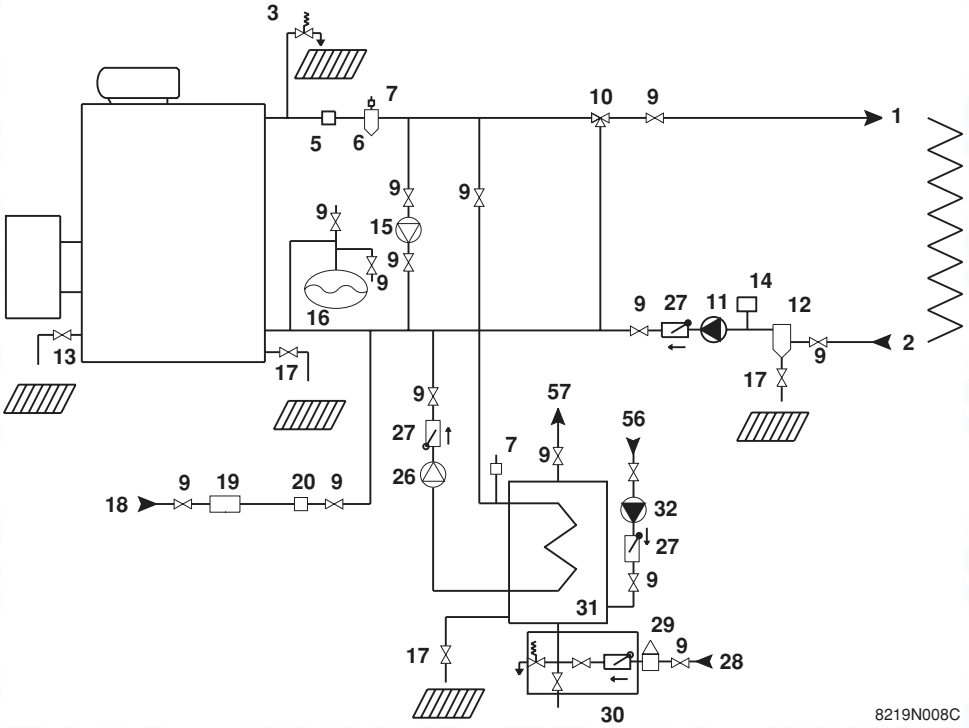

1. Heating outlet
2. Heating return
3. 3 bar safety valve + manometer
5. Flow switch
6. Air separator
7. Automatic bleed valve
9. Isolation valve
10. 3-way mixing valve
11. Boiler pump
12. Sludge decanting pot (particularly recommended on older installations)
13. Flush valve
14. Water low safety pressure-sensitive switch
15. Recycling pump
16. Expansion chamber
17. Drain cock
18. Heating circuit filling (with disconnector depending on prevailing regulations)
19. Water treatment if TH > 25°
20. Water meter
26. DHW load pump
27. Non-return valve
28. Domestic cold water inlet
29. Pressure reducer (if mains pressure 5.5 bar)
30. Sealed safety unit calibrated to 7 bar with indicator type discharge
31. Independent domestic hot water tanks
32. Domestic hot water loop pump (optional)
56. Domestic hot water circulation return loop
57. Domestic hot water outlet

2 Important recommendations for connecting the boiler to the heating circuit

Installation must be carried out in accordance with the prevailing regulations, the codes of practice and the recommendations in these instructions.

▸Minimum safety valve flowrate as a function of maximum boiler nominal output :

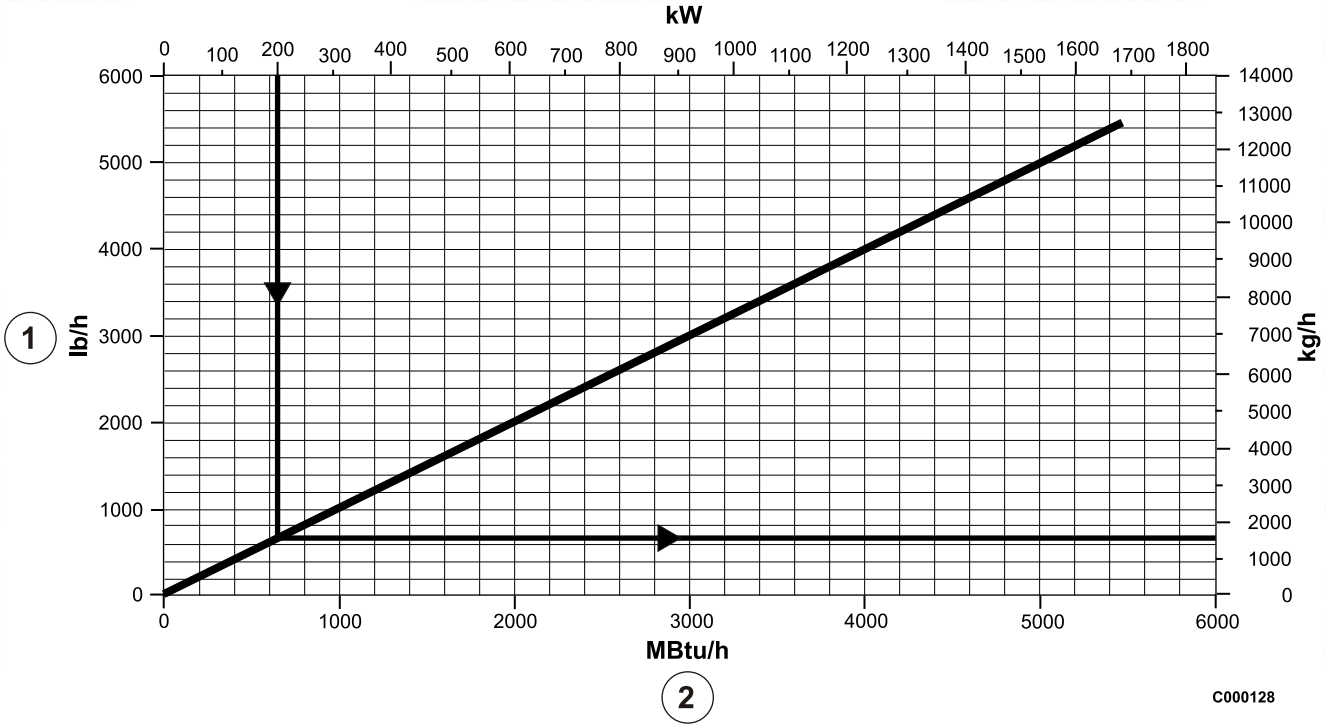

① Minimum relieving capacity

② Maximum gross boiler output

Example

Maximum boiler nominal output is 200 kW.

Minimum safety valve flowrate must be 1500 Kg/h

▸Water flow in the boiler :

The water flow in the boiler when the burner is operating must correspond with the following formulae:

- Nominal water flow Qn = 0.86 Pn/20
- Minimum flow Qmin = 0.86 Pn/45 (this flow also corresponds with the minimum recycle flow in the boiler)
- Maximum water flow Qmax = 0.86 Pn/5

Qn = flow in m^3/h

Pn = Nominal output (full boiler output) in kW.

▸Operation in cascade

After stopping the burner:

- Timeout required before the order to close a butterfly valve: 3 min
- Switch a possible shunt pump (located between the boiler and a butterfly valve) off via the end of run contact of the butterfly valve

▸Operation with 2-stage burner

- The water temperature in the boiler is maintained at 50°C or more ; the first stage must be set to a minimum of 30% of the nominal stage
- Operation at modulated low temperature (minimum outlet temperature: 30°C) ; the first stage must be set to a minimum of 50% of the nominal stage

▸Operation with modulating burner

- The water temperature in the boiler is maintained at 50°C or more: the burner can modulate down to 30% of the nominal stage
- Operation at modulated low temperature (minimum outlet temperature: 30°C) ; the burner can modulate down to 50% of the nominal stage

3 Filling the system

Filling shall be performed with a low flow rate from a low point in the boiler room in order to ensure that all the air in the boiler is bled from the high point of the system.
Always stop the pump before filling.

VERY IMPORTANT : Instructions for starting up the boiler for the first time after the system is fully or partly drained : If all the air is not bled naturally to an expansion vessel which opens out onto the air, the system must include manual bleeder valves, in addition to automatic bleeder valves with the capability to bleed the system by themselves when it is operating; the manual bleeder valves are used to bleed all the high points of the system and to make sure that the filled system is free of air before the burner is turned on.

Do not add cold water suddenly into the boiler when it is hot.

4 Sludge removal

A tapped Ø 1'' 1/2 hole with a plug has been provided on the bottom of the front of the boiler.. Fit a 1/4 turn valve (not supplied) on the opening to remove the sludge.

Sludge removal leads to the draining of large quantities of water, so remember to refill the system after the operation.

Comments :
never replace a boiler in an existing system without carefully rinsing the system first. Install a sludge decanting pot on the return pipe, very close to the boiler.

Chimney connection

The high-performance features of modern boilers and their use in specific conditions as a result of the advance in burner technology (e.g. first-stage or low modulation range operation) lead to very low flue gas temperatures (<160°C).

For this reason :

- Use flue gas pipes designed to enable the flow of condensates which may result from such operating modes in order to prevent damage to the chimney.
- Install a draining tee at the bottom of the chimney.

The use of a draught moderator is recommended as well.

1 Flue size

Refer to applicable regulations while determining the size of the flue. Please note that P 320 boilers have pressurised and tight furnaces and that the pressure at the nozzle must not exceed 0 mbar, unless special sealing precautions have been taken, for instance in order to connect a static condenser/regenerator.

2 Chimney connection

The connection shall be removable, and offer minimum load losses, i.e. it must be as short as possible with no sudden change in section.

Its diameter shall always be at least equal to that of the boiler outlet, i.e. :

Ø 180 mm : for 4 to 6 sections

Ø 200 mm : for 7 to 9 sections

Fit a measuring point (Ø 10 mm hole) on the flue, in order to adjust the burner (combustion check).

Fuel-oil or gas connections

Refer to the instructions supplied with the burner.

The burner head deflector must be flush with the insulation of the burner door.

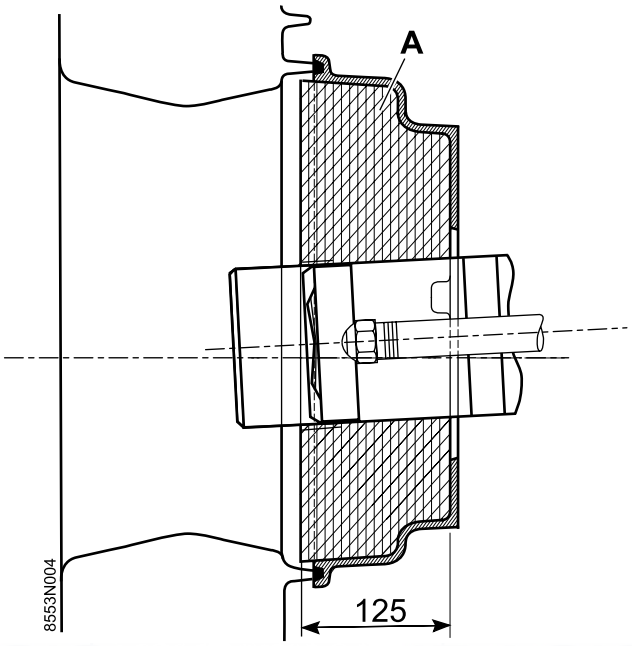

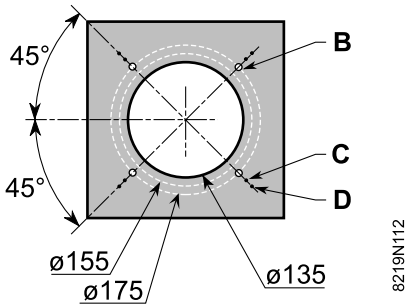

A : Furnace door insulation

B : 4 markings on Ø 170

C : 4 markings on Ø 200

D : 4 markings on Ø 220

Electrical connections

Refer to the connection instructions supplied with the control panel.

The operations described below shall only be performed with the boiler and power supply off.

1 Sweeping

The boiler will only operate efficiently if the exchange surfaces are kept clean.

The boiler should be cleaned as soon as required and as the chimney, **at least once a year or more**, depending upon applicable regulations and specific needs.

Cleaning the flue gas circuit

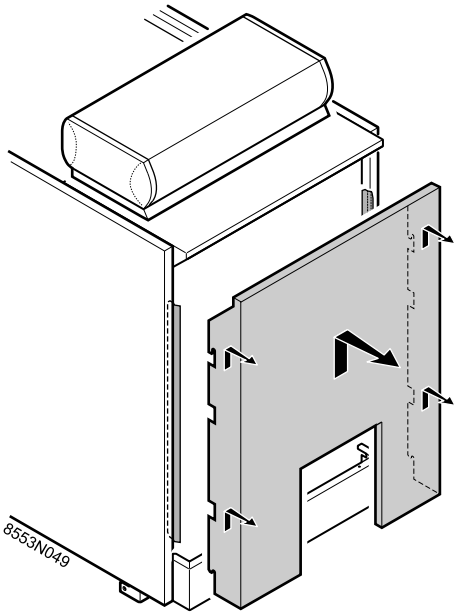

- Cut the power supply to the boiler.
- Unhook the front panel.
- Open the cleaning door (top door) by unscrewing the 4 closing nuts (17 mm spanner),
- Remove the baffle plates,
- Carefully sweep the four flue ways with the brush supplied for that purpose,
- Also sweep the baffle plates and the front panel,
- If possible, use a vacuum cleaner,
- Replace the baffle plates,
- Close the door.

Cleaning the combustion chamber

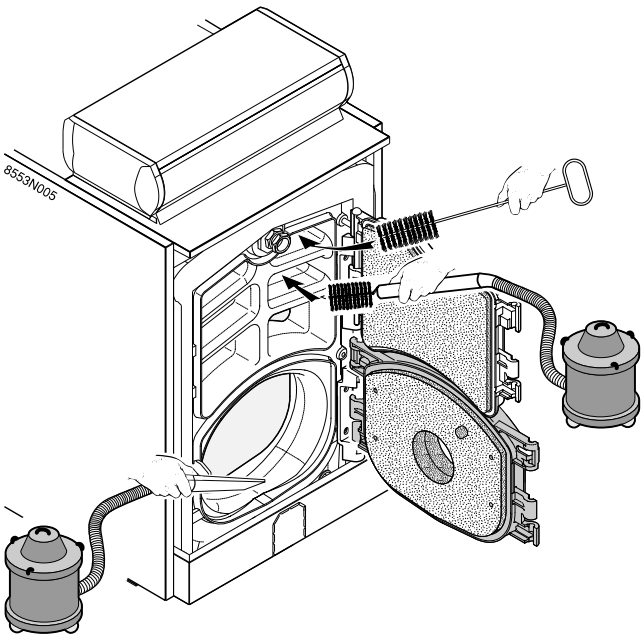

- Unscrew the 4 closing nuts and open the furnace door
- Brush out the inside of the furnace
- Use a vacuum cleaner to remove any soot which has accumulated in the combustion chamber
- Close the door and replace the front panel.
-

Positioning of the baffles

The first two baffles on the two lower flue ways are fitted with stops to position them in the right place.

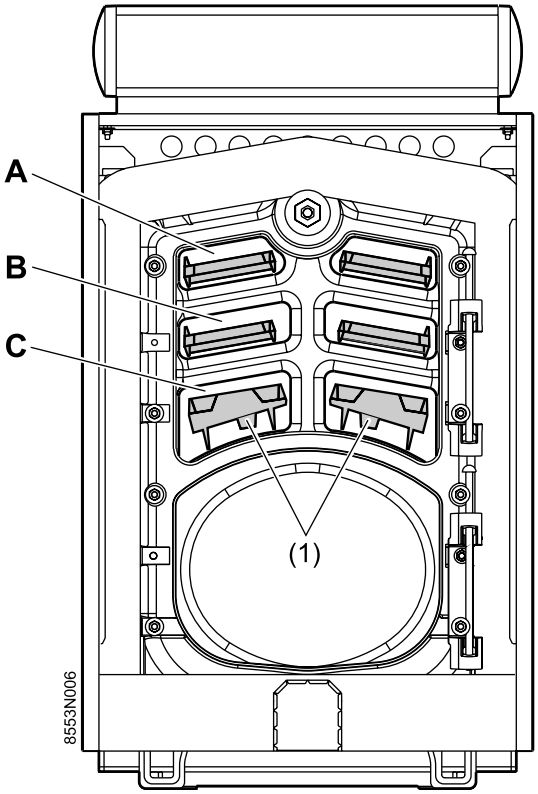

(1) Stop

Cleaning the flue gas box

- Remove the left and right cleaning hatches from the flue gas box (2 butterfly nuts) and use a vacuum cleaner to remove any soot which has accumulated
- Replace the cleaning hatches.

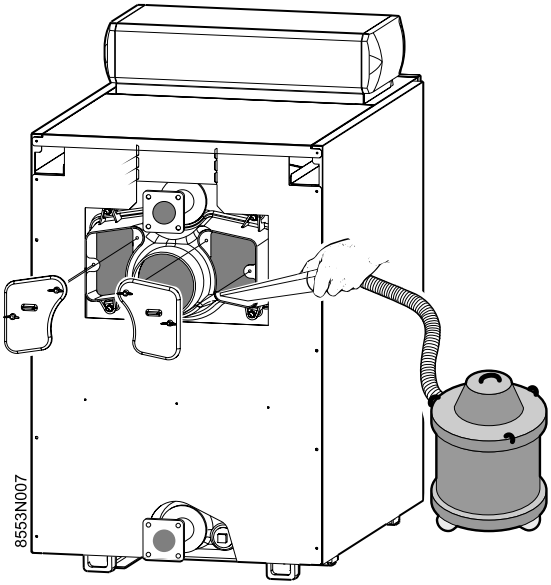

Baffle plates		Flue ways	P 320-4	P 320-5	P 320-6	P 320-7	P 320-8	P 320-9
upper	410 mm	A + B	-	8	8	-	-	-
	570 mm	A + B	4	-	-	4	4	4
interior	412 mm	C	2	2	2	2	2	2

Maintenance of the burner

Refer to the instructions supplied with the burner

2 Cleaning the casing material

Use a soapy solution and a sponge only. Rinse with clean water and dry with chamois leather or a soft cloth.

3 Precautions required in the case of long boiler stops (one or more years)

- The boiler and the chimney must be swept carefully.
- Close all the doors of the boiler to prevent air from circulating inside the boiler.
- We advise removing the pipe which connects the boiler to the chimney and to close off the nozzle with a cover.

4 Precautions required if the heating is stopped when there is a risk of freezing

We recommend the use of a correctly dosed antifreeze agent to prevent to the heating circuit from freezing. If this cannot be done, drain the system completely.

Burner maintenance

Refer to the instructions supplied with the burner.

System maintenance

1 Water level

Regularly check the level of water in the system and top up if required, taking care that cold water is not added suddenly into the boiler when it is hot.

This operation should be required only a few times in each heating season, with very low quantities of water; otherwise, look for the leak and repair it.

2 Draining

We advise you against draining the system unless it is absolutely necessary.

Identification plate

The identification plate fixed on the side of the boiler during installation is used to identify the boiler correctly and also provides the main specifications of the boiler.

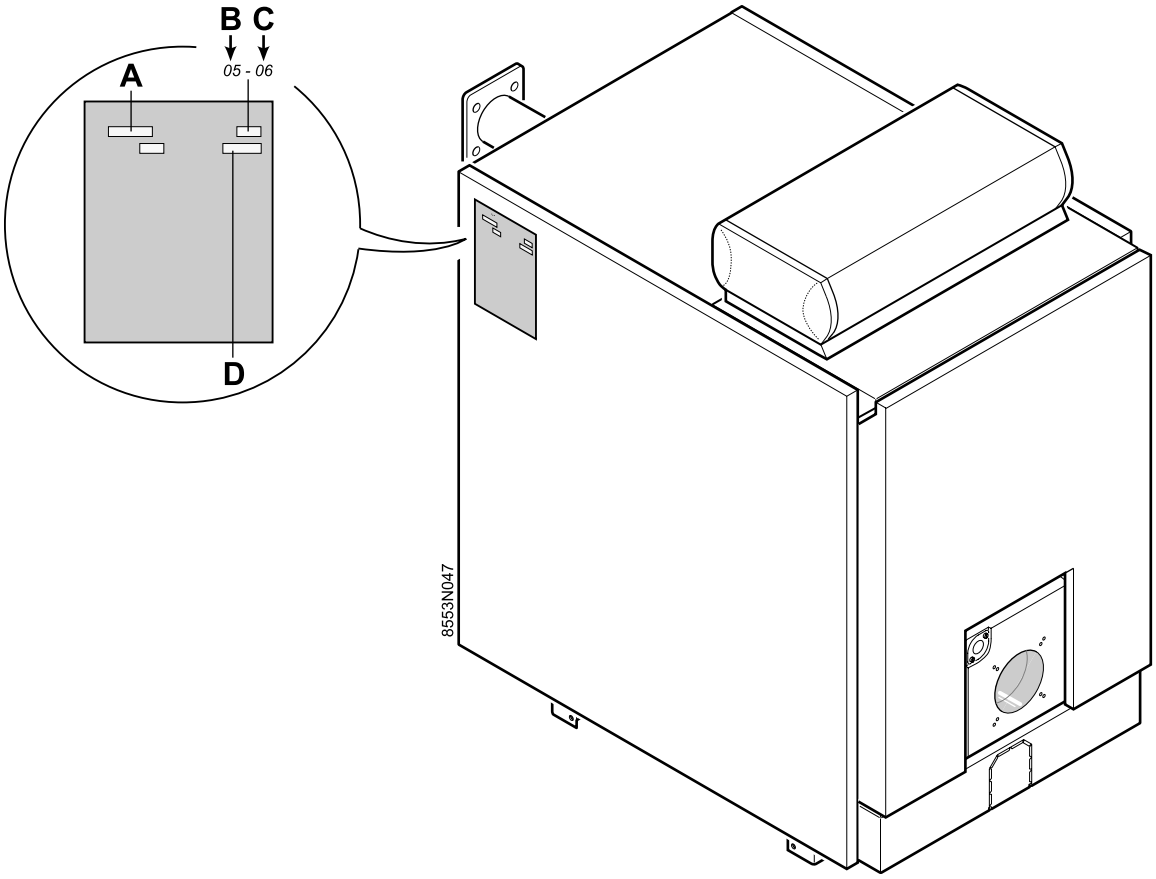

A : Boiler type

B : Year of manufacture

C : Week of manufacture

D : Serial no. of the appliance

To order a spare part, quote the reference number next to the part required.

06/04/06 - UK300004553-002-A

Boiler body

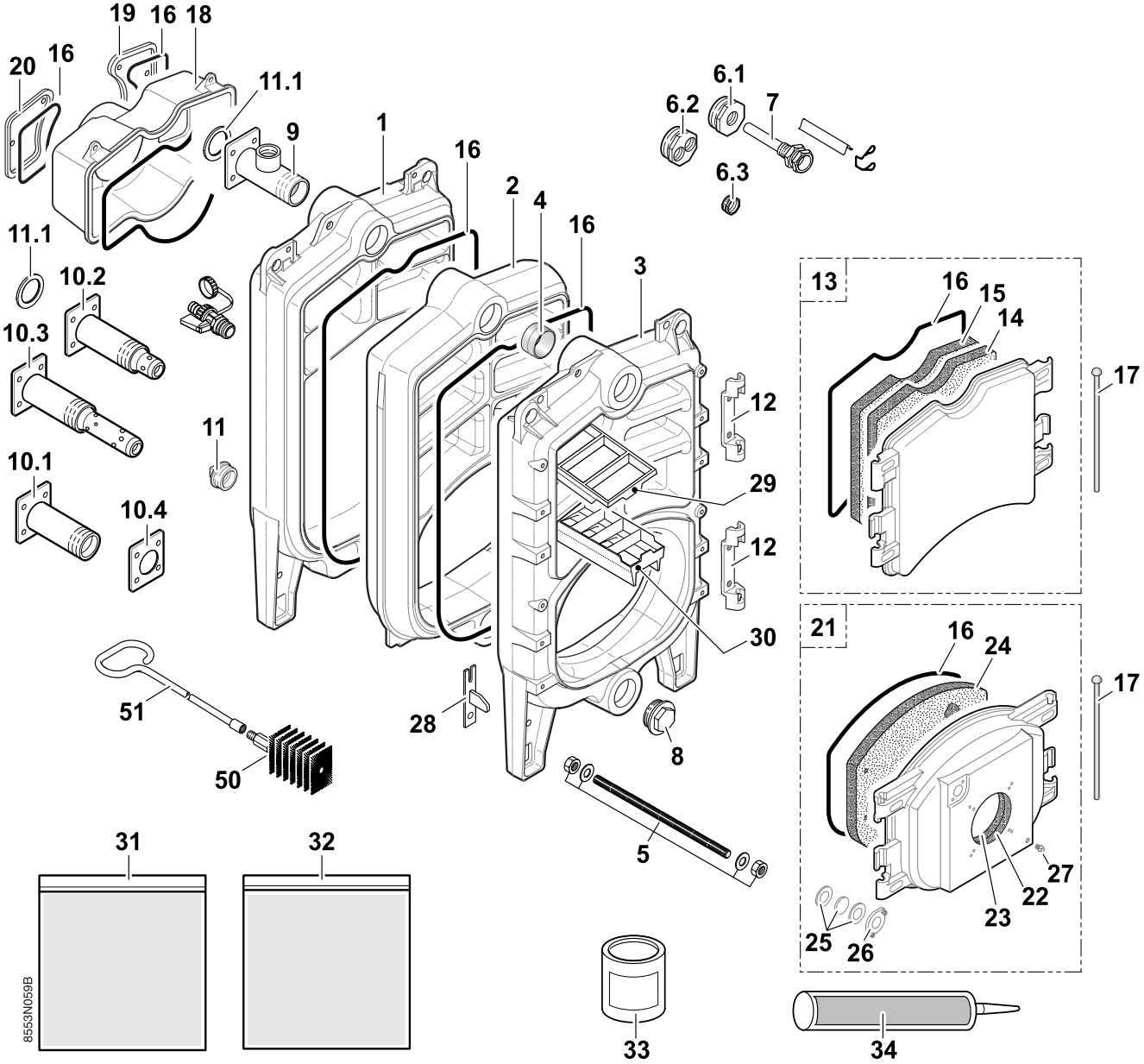

Insulation

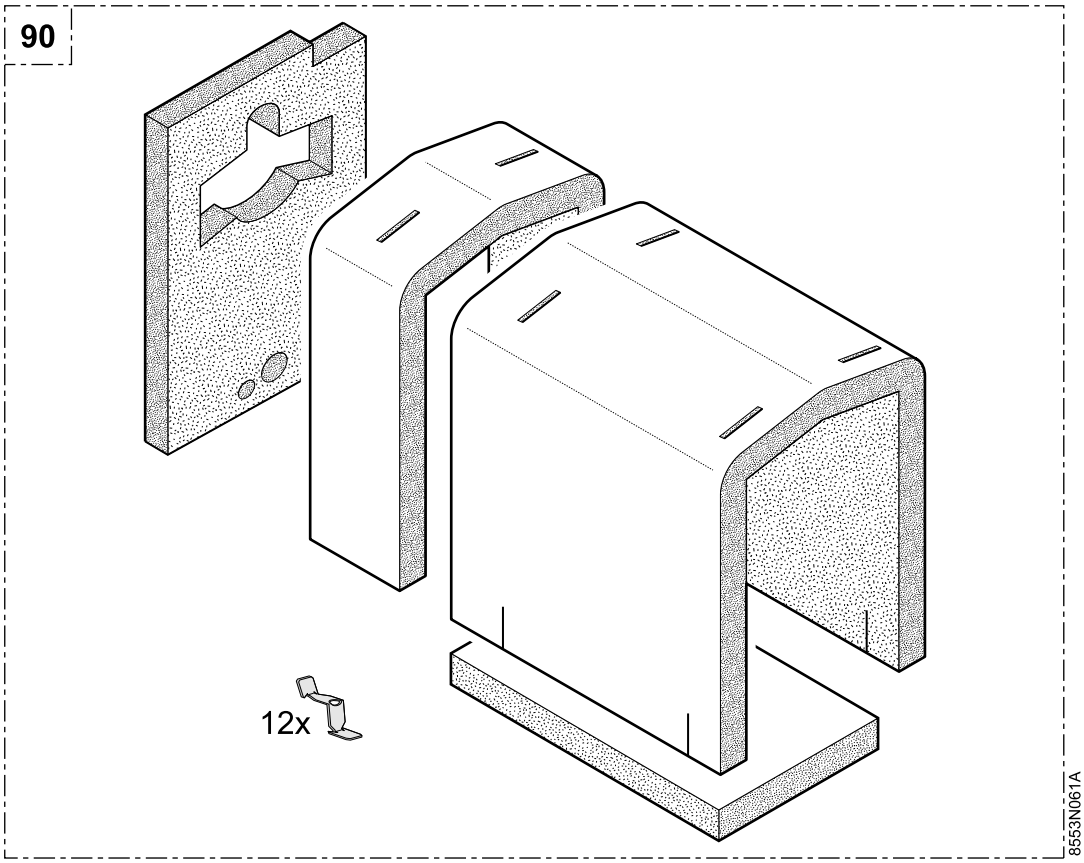

Base frame

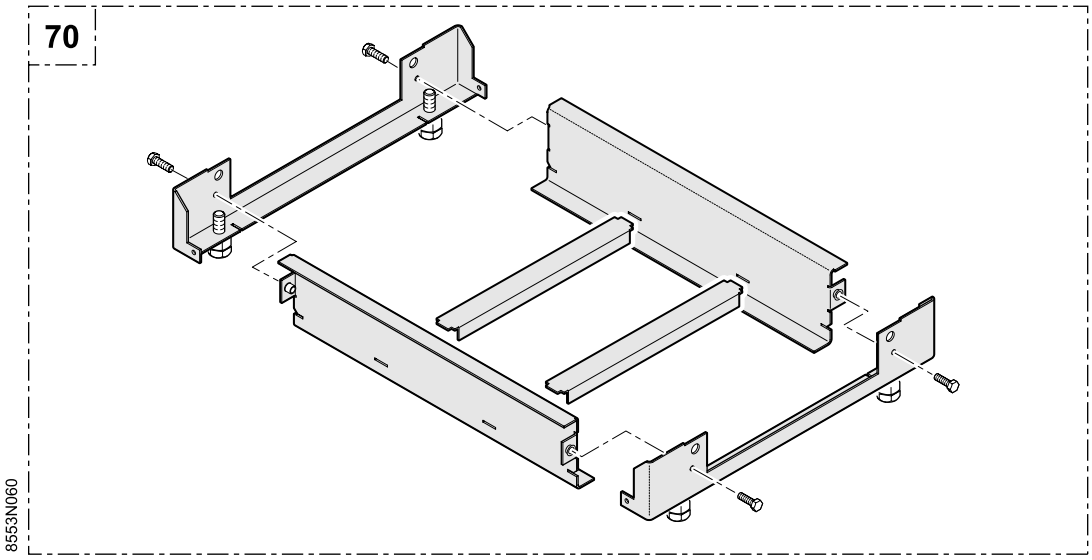

Cladding

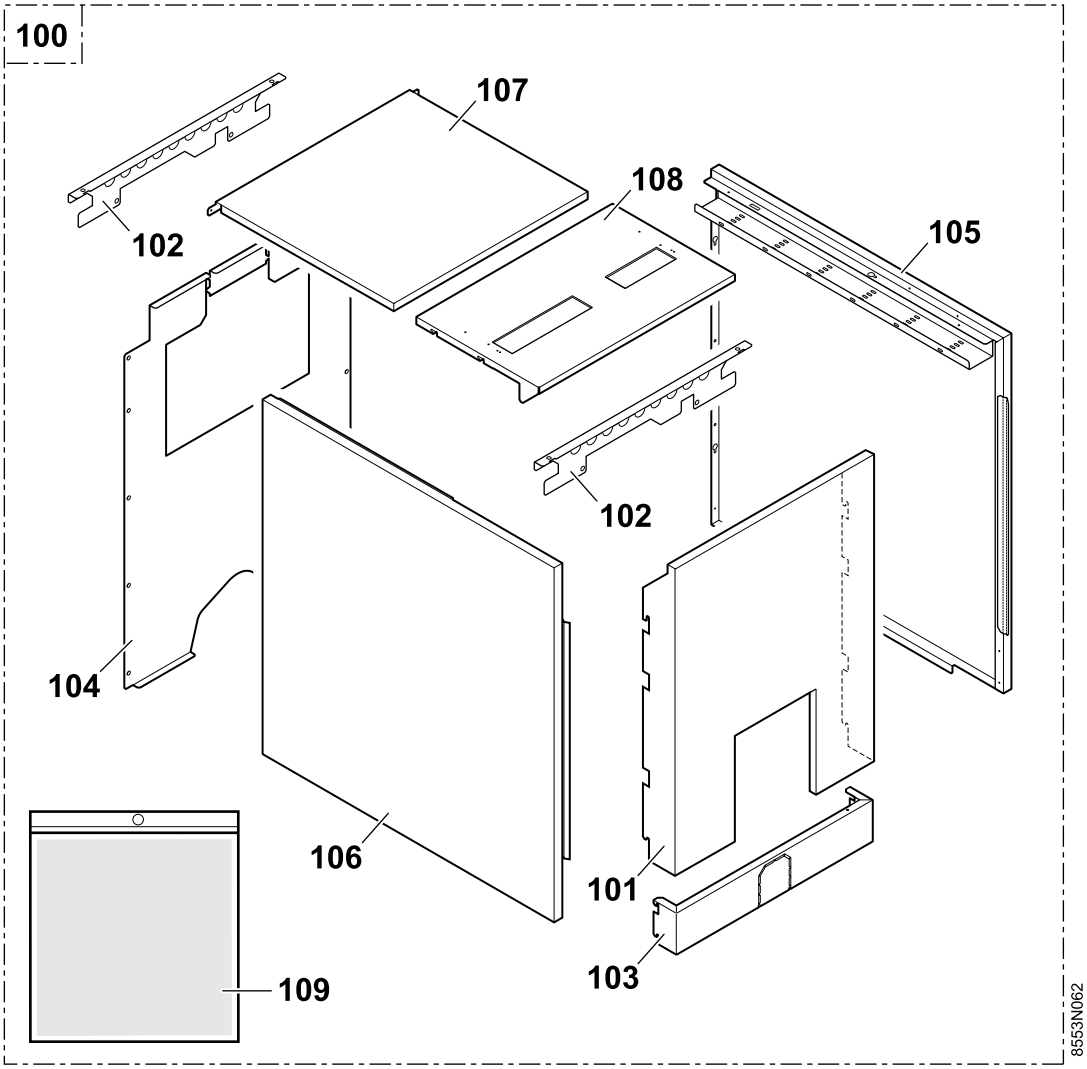

Table - RC 1

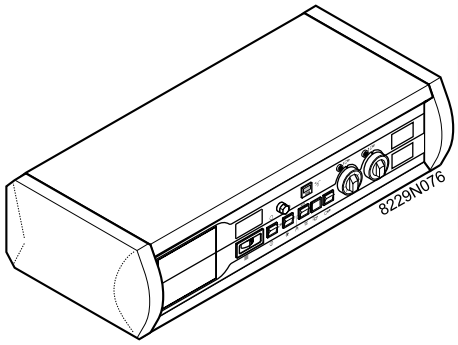

Markers	Code no.	Description
		Boiler body
1	82198912	Complete rear section
2	8219-8966	Special intermediate section
3	8219-8976	Complete front section
4	8116-0571	Nipple
5	8219-8968	Complete assembly rod, 4 sections
5	8219-8969	Complete assembly rod, 5 sections
5	8219-8970	Complete assembly rod, 6 sections
5	8219-8971	Complete assembly rod, 7 sections
5	8219-8972	Complete assembly rod, 8 sections
5	8219-8973	Complete assembly rod, 9 sections
6.1	8202-0028	Plug 2 1/2" - 1/2"
6.2	8209-0049	Plug 2 1/2" - 1/2" - NL
6.3	94948080	Nipple N 241 - 1/2"x1/4"
7	9536-5611	Rp 1/2 pocket
8	80013-0028	Solid plug 2" 1/2
9	8553-5513	Flow flange, 3 to 9 sections
10.1	8553-5514	Return flange, 4 to 5 sections
10.2	8553-5515	Return flange + distribution pipe, 6 to 8 sections
10.3	8553-5516	Return flange + distribution pipe, 9 sections
10.4	9754-9178	Counter flange
11	9495-0249	Male plug 290 T9 - R 1 1/2
11.1	9501-4122	Flange gasket
12	8104-8984	Hinge
13	8219-8916	Sweeping door
14	9425-0306	Inner protection, sweeping door
15	9425-0305	Insulation, sweeping door
16	9508-6032	10 Ø thermocord gasket
17	9756-0203	Pin Ø 12x350
18	8219-8913	Ø 180 complete nozzle
18	8219-8914	Ø 200 complete nozzle
19	8219-0206	Right hand nozzle cover
20	8219-0207	Left hand nozzle cover
21	8219-8953	Complete combustion chamber door, ø 135
22	9425-0303	Internal protection, combustion chamber door
23	9425-0302	Furnace door guard
24	9425-0301	Furnace door insulation
25	8015-7700	Sight glass + gaskets

Markers	Code no.	Description
26	9757-0027	Inspection flange
27	9495-0050	Plug 1/4"
28	8219-0539	Guide rail for combustion chamber door
29	8219-0017	Upper baffle plate, 410 mm
29	8219-0018	Upper baffle plate, 570 mm
30	8219-0019	Lower baffle plate, 412 mm
30	8219-0020	Lower baffle plate, 572 mm
31	8219-7724	Body screws packet
32	8219-8957	Bag of screws for furnace door
33	9430-5027	0.3 kg can nipple lubricant
34	9432-0214	Mastic Novasil S 17
		Miscellaneous
50	9750-5025	Brush
51	9750-5076	1000 mm brush rod
51	9750-5060	1300 mm brush rod
		Base frame
70	8553-7060	Complete frame 4 sections Package FD 30
70	8553-7061	Complete frame 5 sections Package FD 31
70	8553-7062	Complete frame 6 sections Package FD 32
70	8553-7063	Complete frame 7 sections Package FD 33
70	8553-7064	Complete frame 8 sections Package FD 34
70	8553-7065	Complete frame 9 sections Package FD 35
		Insulation
90	8553-5507	Complete boiler body insulation, 4 sections
90	8553-5008	Complete boiler body insulation, 5 sections
90	8553-5509	Complete boiler body insulation, 6 sections
90	8553-5510	Complete boiler body insulation, 7 sections
90	8553-5511	Complete boiler body insulation, 8 sections
90	8953-5512	Complete boiler body insulation, 9 sections

Markers	Code no.	Description
		Cladding
100	100003501	Complete cladding, 4 sections
100	100003502	Complete cladding, 5
100	100003503	Complete cladding, 6
100	100003504	Complete cladding, 7
100	100003505	Complete cladding, 8
100	100003506	Complete cladding, 9
101	200003545	Front panel
102	8553-8000	Upper crosspiece
103	8553-5506	Lower cap
104	8553-8519	Complete rear panel
105	8553-8545	Complete side panel right, 4 sections
105	8553-8546	Complete side panel right, 5 sections
105	8553-8547	Complete side panel right, 6 sections
105	8553-8548	Complete side panel right, 7 sections
105	8553-8549	Complete side panel right, 8 sections
105	8553-8550	Complete side panel right, 9 sections
106	8553-8551	Complete side panel left, 4 sections
106	8553-8552	Complete side panel left, 5 sections
106	8553-8553	Complete side panel left, 6 sections
106	8553-8554	Complete side panel left, 7 sections
106	8553-8555	Complete side panel left, 8 sections
106	8553-8556	Complete side panel left, 9 sections
107	8553-8512	Complete rear cover, 4 sections
107	8553-8513	Complete rear cover, 5 sections
107	8553-8514	Complete rear cover, 6 sections
107	8553-8515	Complete rear cover, 7 sections
107	8553-8516	Complete rear cover, 8 sections
107	8553-8517	Complete rear cover, 9 sections
108	8553-8518	Complete front cover
109	8553-8520	Screw bag
		Control panel K - RC 1
		Refer to the Spare Parts list in the panel instructions.

spares & parts online
IBASIS.CO.UK

spares & parts online
IBASIS.CO.UK

NL **Remeha B.V.**
Postbus 32
7300 AA APELDOORN
Tel: +31 55 5496969
Fax: +31 55 5496496
Internet: nl.remeha.com
E-mail: remeha@remeha.com

GB **Broag Ltd.**
Remeha House
Molly Millars Lane
RG41 2QP WOKINGHAM, Berks.
Tel: +44 118 9783434
Fax: +44 118 9786977
Internet: uk.remeha.com
E-mail: boilers@broag-remeha.com

B **J.L. Mampaey BVBA**
Uitbreidingstraat 54
2600 ANTWERPEN
Tel: +32 3 2307106
Fax: +32 3 2301153
Internet: www.mampaey.be
E-mail: info@mampaey.be

B **Thema S.A.**
6, Avenue de l'expansion
4460 GRACE-HOLLOGNE
Tel: +32 4 2469575
Fax: +32 4 2469576
Internet: www.thema-sa.be
E-mail: info@thema-sa.be

H **Marketbau - Remeha Kft.**
Gyár u. 2.
Ipari Park
2040 BUDAÖRS
Tel: +36 23 503 980
Fax: +36 23 503 981
Internet: www.remeha.hu
E-mail: remeha@remeha.hu

E **Termibarna S.A.**
C. Zamora 55-59
08005 BARCELONA
Tel: +34 3 3000204
Fax: +34 3 3009558

E **Cuatrocesa S.A.**
c) Sor Angela de La Cruz, 10
- 1º Oficina C
28020 MADRID
Tel: +34 91 658 18 88
Fax: +34 91 658 30 77

E **D.A.C. S.A.**
Tomás A. Edison 29
Poligono Cogullada
50014 ZARAGOZA
Tel: +34 76 464076
Fax: +34 76 471311
Internet: www.dac.es
E-mail: dac@dac.es

E **Norte Comercial Organización S.A.**
Bereteage Bidea, 19
48180 LOIU (Vizcaya)
Tel: +34 94 471 03 33
Fax: +34 94 471 11 52
E-mail: nco@nco.es

IRL **Euro Gas Ltd.**
Unit 38, Southern Cross Business Park
Boghall Road, Bray, Co
WICKLOW
Tel: +353 12868244
Fax: +353 12861729
Internet: www.eurogas.ie
E-mail: sales@eurogas.ie

D **Remeha Wärmetechnik GmbH**
Bischofstr. 96 - 98
47809 KREFELD
Tel: 02151/5587-0
Fax: 00151/557798
Internet: www.remeha.de
E-mail: remeha@remeha.de

© **Copyright**

All technical and technological information contained in these technical instructions, as well as any drawings and technical descriptions supplied, remain our property and shall not be multiplied without our prior consent in writing..

Ours is a policy of continuous development. We reserve the right to alter specifications without prior notification

.

Subject to alterations

remeha